Electric actuator ARI-PREMIO®

Electric thrust actuator ARI-PREMIO® 2,2 - 5 kN

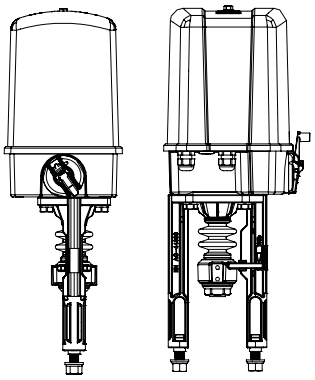

Page 2

Electric thrust actuator ARI-PREMIO® 12 - 25 kN

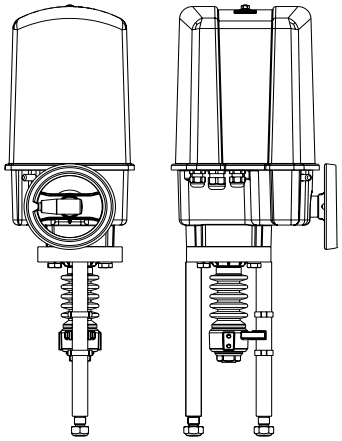

Page 4

Features

- 2 torque switches
- Handwheel
- Operative ambient temperatures -20 °C up to +70 °C
- Enclosure IP 65
- Additional devices available, e.g. potentiometer
- Travel indicator

Electric thrust actuator ARI-PREMIO® 2,2 - 5 kN

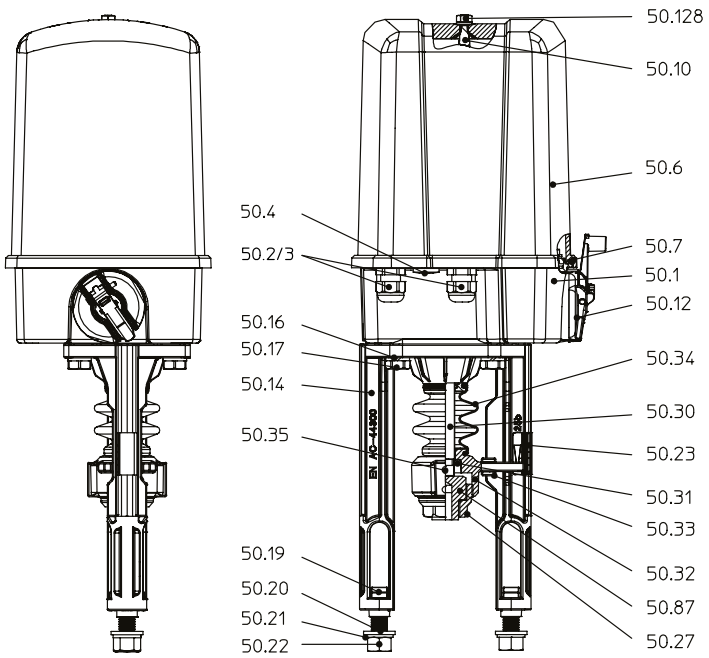

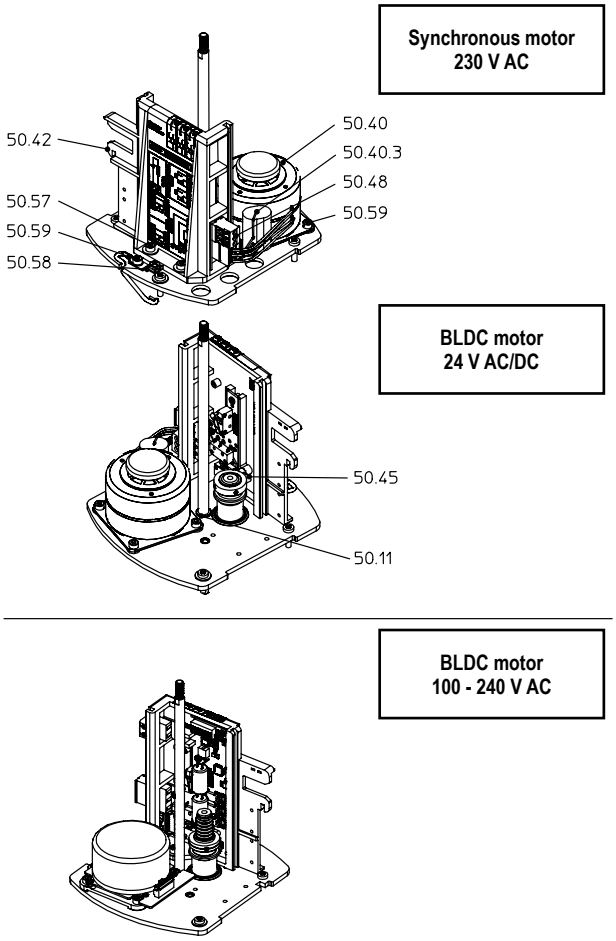

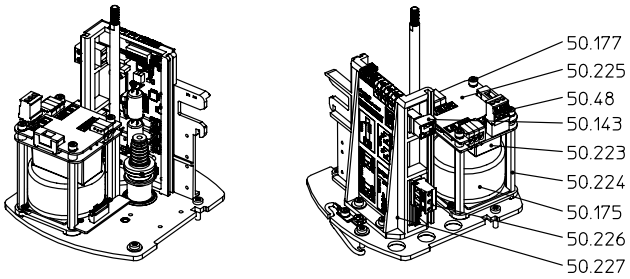

Pos.	Description
50.1	Gearbox
50.2/3	Cable gland 2 x M16 x 1,5
50.4	Sealing plug 1 x M16 x 1,5
50.6	Hood
50.7	Hood seal
50.10	Column
50.11	Conical spring washer
50.12	Handwheel
50.14	Yoke
50.16	Spring washer DIN 128 - A10
50.17	Hexagon screw DIN EN ISO 4017 - M10 x 40
50.19	T-head bolt DIN 261 - M12 x 40
50.20	Washer DIN EN ISO 7089
50.21	Spring washer DIN 128 - A12
50.22	Hexagon nut DIN EN ISO 4032 - M12
50.23	Lift dial
50.27	Coupling
50.30	Driving spindle
50.31	Spindle safety feature
50.32	Torsion safety feature
50.33	Slide

Pos.	Description
50.34	Bellow
50.35	Grub screw DIN ISO 4766 - M6
50.40	Synchronous motor, complete
50.40.3	Capacitor
50.42	Board support, cpl. (incl. circuit board 2 x DE, 1 x WE)
50.45	Shift lever
50.48	Connector, 3-pole (standard)
50.57	Cylinder screw DIN EN ISO 4762 - M4 x 10
50.58	Protective conductor terminal
50.59	Cylinder screw DIN EN ISO 4762 - M4 x 6
50.87	Threaded bush
50.128	Collar nut with sealing ring M6
50.143	Connector, 2-pole (N/L)
50.175	BLDC motor
50.177	Cylinder screw M4 x 18
50.223	Input board ESP with power supply
50.224	Distance bolt M4 x 65
50.225	Protective cover BLDC ESP
50.226	Connector, 3-pole (0 V/24 V up/down)
50.227	Board support PREMIO, cpl. BLDC

Technical data

Type		ARI-PREMIO® 2,2 kN		ARI-PREMIO® 5 kN
Thrust force	kN	**2,2 kN**		**5,0 kN**
Operating speed	mm/s	0,38 mm/s	0,25/0,38/0,47/1,0 mm/s adjustable	
Travel distance max.	mm	50 mm		
Duty cycle acc. to EN ISO 22153		Class C (modulation) @70°C		
Supply voltage	V - Hz	**230 V - 50/60 Hz**	**24 V AC/DC**	
Motor type		**Synchronous motor**	**BLDC (Brushless DC motor)**	
Power consumption	VA	21	max. 22	max. 65
Current consumption	A	approx. 0,1 A	approx. 1 A	approx. 2,5 A
Torque switch		2 pcs., fixed wiring switching capacity 10 A, 250 V~		
Travel switch		1 pc., fixed wiring switching capacity 10 A, 250 V~ (Options trip slide necessary!)		
Enclosure EN 60529		IP 65		
Max. storage temperature	°C	-40 °C ... +85 °C		
Max. permissible ambient temperature	°C	-20 °C ... +70 °C, for UL/CSA version up to max. +60 °C (For outdoor use and sub-zero temperatures, a heating is recommended!)		
Hand operating device		Yes (always running)		
Operation		3-point - Response time up to 100 ms	3-point - Response time approx. 80 ms	
Max. cable cross section	mm^2	3-point-input: 2,5 mm^2		
Cable diameter for cable glands		2 x M16 x 1,5: 5 - 9,5 mm		
Electrical safety according to DIN EN 61010, part 1		Overvoltage category II Pollution degree 2 Altitude up to 2000 m Rel. humidity ≤ 90 % non-condensing		
Mounting position		Any, except: motor not hanging downwards		
Gear lubricant		Klüber Isoflex Topas NB152		
Weight	kg	5,8 kg		

Accessories	refer to page 6

Additional voltage / frequencies

Type		100 - 240 V AC switching power supply for BLDC version	
Thrust force	kN	2,2 kN	5,0 kN
Input voltage	V - Hz	3-point signal: 100 - 240 V AC 50/60 Hz	
Output voltage	V	24 V DC	
Output signal		3-point (TTL technology)	
Current consumption max.	A	max. 0,4 A at 230 V/0,6 A at 115 V	
Response time	ms	approx. 400 ms	

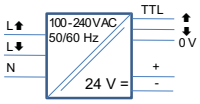

Type		3~ 400 V transformer for BLDC version with direction detection and 3-point-output	
Thrust force	kN	2,2 kN	5,0 kN
Input voltage	V - Hz	UVW: 3~ 400 V - 50/60 Hz	
Output voltage	V	3-point signal: 24 V DC	
Current consumption max.	A	max. 0,13 A	
Response time	ms	< 10 ms	

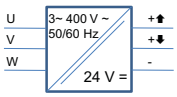

Electric thrust actuator ARI-PREMIO® 12 - 25 kN

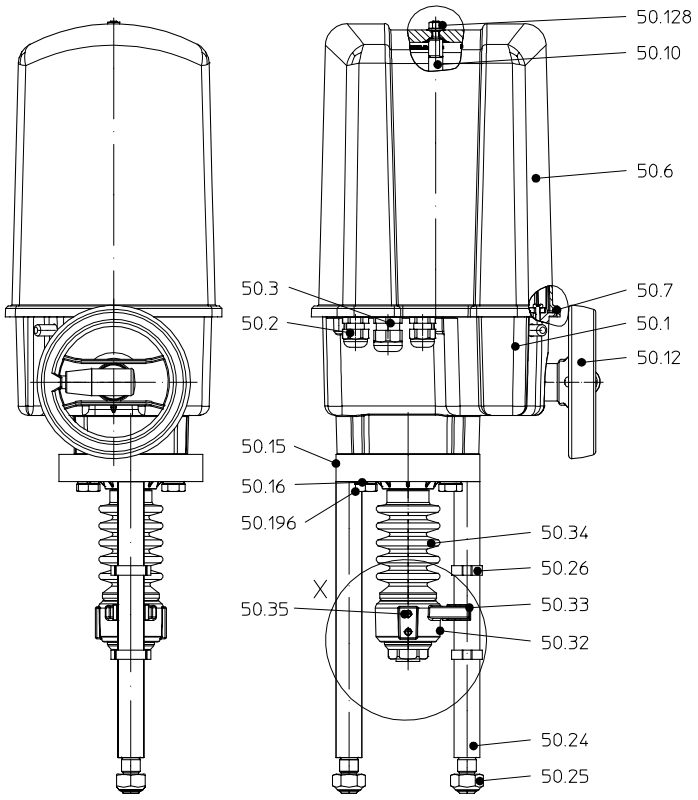

Coupling 25 kN

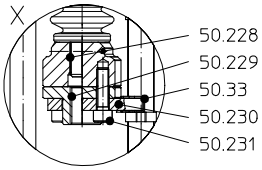

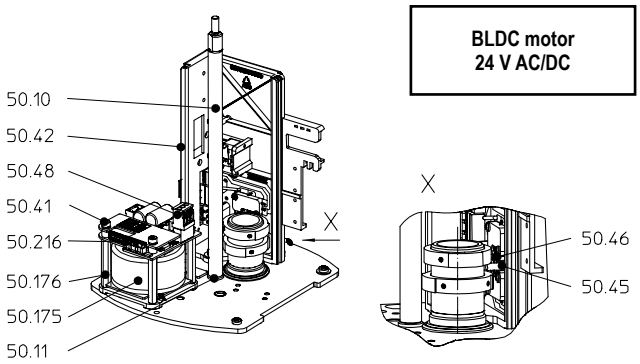

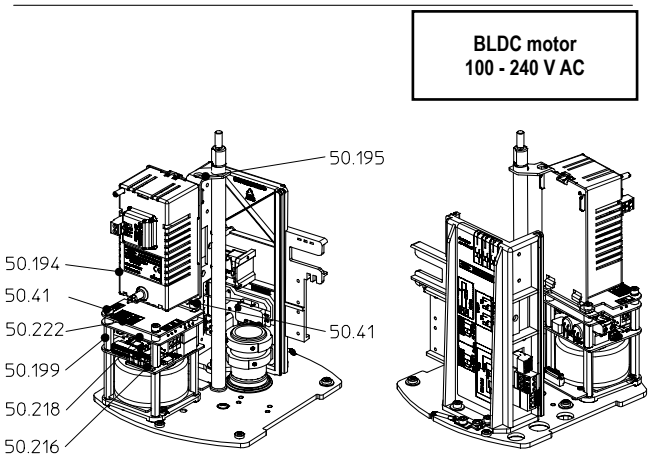

Pos.	Description
50.1	Gearbox
50.2/3	Cable gland 2 x M16 x 1,5/1 x M20 x 1,5
50.6	Hood
50.7	Hood seal
50.10	Column
50.11	Conical spring washer
50.12	Handwheel (engageable)
50.15	Flange
50.16	Spring washer DIN 128 - A10
50.24	Distance column
50.25	Hexagon nut DIN EN ISO 7042 - V - M16
50.26	2-ear clamp (Travel indicator)
50.32	Torsion safety feature
50.33	Slide
50.34	Bellow
50.35	Grub screw DIN ISO 4766 - M6
50.41	Cylinder screw DIN EN ISO 4762-M4 - 18
50.42	Board support, cpl. (incl. circuit board 2 x DE; 1 x WE)

Pos.	Description
50.45	Shift lever
50.46	Spring washer
50.48	Connector, 3-pole (standard)
50.128	Collar nut with sealing ring M6
50.175	BLDC motor
50.176	Distance bolt M4 x 45
50.194	Power supply, cpl.
50.195	Fastening angle power supply
50.196	Hexagon screw DIN EN 24017 M10 x 100
50.199	Distance bolt M4 x 23
50.216	Motor control board BLDC
50.218	Input board 3-point without power supply
50.222	Protective cover BLDC without power supply
50.228	Spindle unit
50.229	Threaded bush
50.230	Non-rotation lock
50.231	Cylinder screw M10 x 35

Technical data

Type		ARI-PREMIO® 12 kN	ARI-PREMIO® 15 kN	ARI-PREMIO® 25 kN
Thrust force	kN	**12,0 kN**	**15,0 kN**	**25,0 kN**
Operating speed	mm/s	0,20/0,31/0,38/0,79 mm/s adjustable		
Travel distance max.	mm	80 mm		
Duty cycle acc. to EN ISO 22153		Class C (modulation) @70°C		
Supply voltage	V - Hz	24 V AC/DC		
Motor type		**BLDC (Brushless DC motor)**		
Power consumption	VA	max. 65 (depending on the operating speed and operating force)		max. 130 (depending on the operating speed and operating force)
Current consumption	A	approx. 2,5 A		approx. 5 A
Torque switch		2 pcs., fixed wiring switching capacity 16 A, 250 V ~		
Travel switch		1 pc., fixed wiring switching capacity 16 A, 250 V ~ (Options trip slide necessary!)		
Enclosure EN 60529		IP 65		
Max. storage temperature	°C	-40 °C ... +85 °C		
Max. permissible ambient temperature	°C	-20 °C ... +70 °C, for UL/CSA version up to max. +60 °C (For outdoor use and sub-zero temperatures, a heating is recommended!)		
Hand operating device		Yes (engageable)		
Operation		3-point - Response time approx. 80 ms		
Max. cable cross section	mm^2	3-point-input: 2,5 mm^2		
Cable diameter for cable glands		2 x M16: 5 - 9,5 mm 1 x M20: 8 - 13 mm		
Electrical safety according to DIN EN 61010, part 1		Overvoltage category II Pollution degree 2 Altitude up to 2000 m Rel. humidity ≤ 90 % non-condensing		
Mounting position		Any, except: motor not hanging downwards		
Gear lubricant		Klübersynth G34 - 130		
Weight	kg	10,0 kg		11,0 kg

Zubehör	refer to page 6

Additional voltage / frequencies

Type		100 - 240 V AC switching power supply		
Thrust force	kN	12,0 kN	15,0 kN	25,0 kN
Input voltage	V - Hz	3-point signal: 100 - 240 V AC 50/60 Hz		
Output voltage	V	24 V DC		
Output signal		3-point (TTL technology)		
Current consumption max.	VA	max. 1 A at 230 V/ 1,8 A at 115 V		max. 1,1 A at 230 V/ 1,9 A at 115 V
Response time	ms	approx. 240 ms		approx. 350 ms

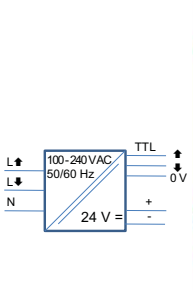

Type		3~ 400 V transformer with direction detection and 3-point-output		
Thrust force	kN	12,0 kN	15,0 kN	25,0 kN
Input voltage	V - Hz	UVW: 3~ 400 V - 50/60 Hz		
Output voltage	V	3-point signal: 24 V DC		
Current consumption max.	A	max. 0,13 A		max. 0,35 A
Response time	ms	< 10 ms		

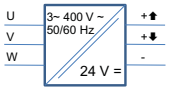

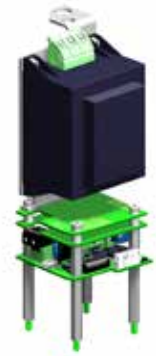

Accessories

Type		ARI-PREMIO® 2,2 kN - 25 kN	
Trip slide		**Required for actuating ...** - the travel switch S3/retracting spindle (the travel swith S3 is in the basic version of the actuator already available) - the potentiometer - the additional travel switches S4/S5	
Options trip slide necessary !	**Additional intermediate position switches S4, S5** (for low switching capacities and at aggressive atmosphere gold contacts should be used)	**Type Standard**	- 2 pieces, zero potential, switching capacity max. 10 A, 250 V ~
		Type Low voltage	- 2 pieces, zero potential, with gold contacts, switching capacity max. 0,1 A, 4 - 30 V
	Potentiometer	**Conductive** (max. 2 pcs.)	- 1000, 2000, 5000 Ohm; 1 Watt (at +70 °C) - Wiper current max. 0,01 mA/recommended 0,002 mA
		Wire (max. 2 pcs.)	- 100, 200 Ohm; 0,5 Watt (at +70 °C) - Wiper current max. 35 mA/recommended 0,02 mA
		TÜV-approved potentiometer (max. 2 pcs.)	- TÜV tested „conductive plastic for use as a sensor for position feedback of control devices in electronic systems for controlling and monitoring of fuel, air and gas streams in combustion plants“ - 5000 Ohm (standard) - or optional: 100, 200, 1000 Ohm; 1 Watt (at +70 °C) - Wiper current max. 0,01 mA/recommended 0,002 mA - No retrofitting possible!
	Electronic position controller (for controling the actuator with an analogue control signal)	**Type PREMIO-Plus 2G** (according to separate data sheet / operating instructions)	- Input signals: 3-point, 0 - 10 V or 4 - 20 mA - Self-adaptation - Optional position feedback - Galvanical separation between power supply and control signal
		Type ES11	- Input signals 0(2)...10 V or 0(4)...20 mA - Galvanical separation between power supply and control signal - Including potentiometers (note max. number of potentiometers)
	Electronic position indicator (for position feedback with an analogue control signal)	**RI21**	- Analogue output for position-feetback 0(4)...20 mA changeable to 0(2) - 10 V, invertable; galvanical separation between power supply and control signal - Active - Incl. potentiometers (note max. number of potentiometers)
		RI32	- Analogue output for position-feetback 2... 10 V; 4... 20 mA - Compact design; 2 (passive) or 4-wire technology (active) - Power supply: 24 V AC/DC - Incl. potentiometers (note max. number of potentiometers)
Heating		**Heating resistor**	- (Automatic switching circuit) 230 V AC, 115 V AC, 24 V AC/DC, 15 Watt
Connection board 2 Torque- and 1 Travel switch, all switch contacts are wired on terminals (for low switching capacities and at aggressive atmosphere gold contacts should be used)		**Type Standard PA**	- Zero potential, switching capacity 10 A, 250 V ~ - (At 12-25kN already possible with the standard version)
		Type Low voltage NA	- Zero potential, with gold contacts, switching capacity max. 0,1 A, 4 - 30 V
(Process-) controller		**Type process controller dTRON 316** (according to data sheet / operating instructions PREMIO®-Plus 2G)	- Mounted in the actuator **PREMIO®-Plus 2G** - 4-20 mA output for operating the PREMIO-Plus 2G - For resistance thermometers and thermocouples (provided by the customer) or standard signals - Pre-configured for temperature control: control range von -200 °C up to +850 °C (resistance thermometer)

Special voltage 3~ 400 V		
Built-in reversal feature	**Electronic reversing contactor** (according to data sheet / operating instructions PREMIO®-Plus 2G)	- **PREMIO®-Plus 2G** with 3~ 400 V transformer - 3-point, 4-20 mA or 0-10 V operation - Electronically commutated, variable speed BLDC motor

Intermediate position switch	
Pos.	**Description**
50.42	Board support
50.50	Trip slide
50.52	Setting spindle for switch S4
50.53	Setting spindle for switch S5
50.61.2	Travel switch S4
50.61.3	Travel switch S5
50.62	Connector, 6-pole

Potentiometer	
Pos.	**Description**
50.42	Board support
50.67	Potentiometer
50.68	Connecting cable
50.69	Self-tapping screw
50.70	Pinch spring
50.71	Slide block
50.73	Pinion
50.74	Connector, 3-pole

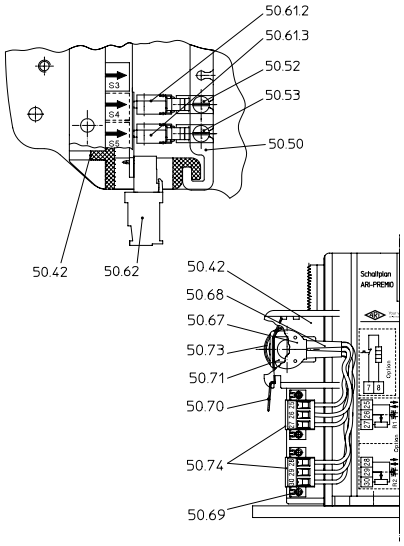

Electronic position controller ES11						
Motor type		**BLDC motor**		**Synchronous motor**		
Operating voltage	U_B	24 V - DC	24 V - AC	24 V - AC	115 V - AC	230 V - AC
		--	50/60 Hz	50/60 Hz	50/60 Hz	50/60 Hz
Operating current without load	I_B	150 mA			40 mA	20 mA
Input control signal	Y_U	0(2) .... 10 V DC - (RI = 30 kOhm)				
Input control signal	Y_I	0(4) .... 20 mA DC - (RI = 125 Ohm)				
Potentiometer input	R_P	0 .... 10 kOhm, recommended 0 .... 1 kOhm (Potentiometer can be used only as a voltage divider)				
3-point-output	U_A	24 V - DC		24 V - AC	115 V - AC	230 V - AC
3-point-switching current	I_S	4 A max.				

Electronic position indicator RI21				
Operating voltage	U_B	24 V - AC/DC 50/60 Hz	115 V - AC 50/60 Hz	230 V - AC 50/60 Hz
Operating current without load	I_B	150 mA	40 mA	20 mA
Output control signal	Y_U	0(2) .... 10 V DC - (load resistance > 1 kOhm) active		
Output control signal	Y_I	0(4) .... 20 mA DC - (load resistance max. 800 Ohm) active		
Potentiometer input	R_P	0 .... 1 kOhm		

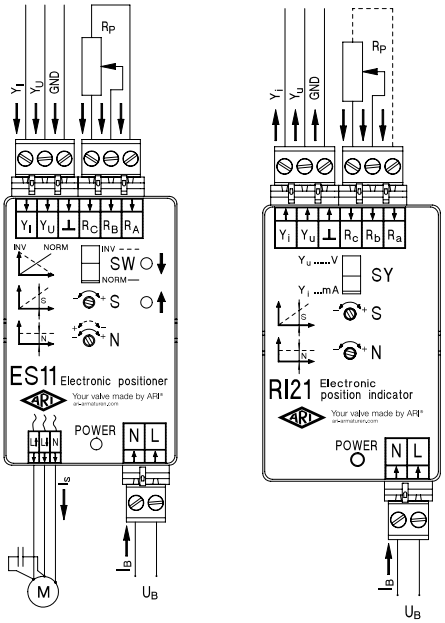

Electronic position indicator RI32		
Operating voltage	U_B	24 V - DC/AC 50/60 Hz
Output control signal	Y_U	2 .... 10 V DC active
Output control signal	Y_I	4 .... 20 mA DC - (load resistance max. 500 Ohm) passive or active
Potentiometer input	R_P	100 Ohm .... 20 kOhm

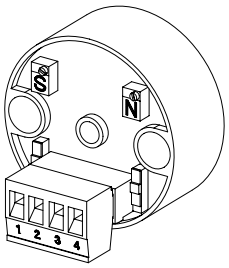

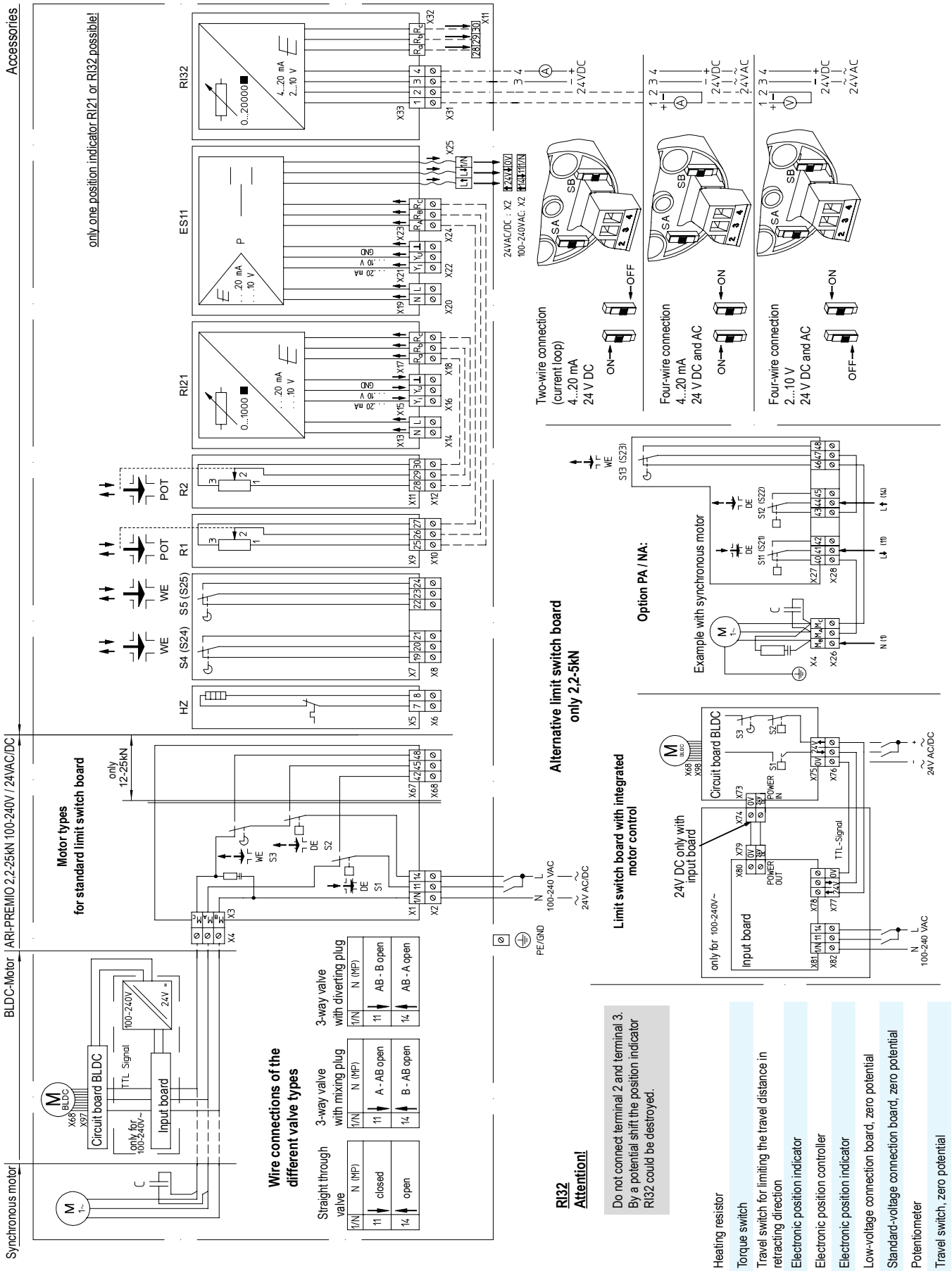
Accessories
only one position indicator RI21 or RI32 possible!
RI32
ES11
RI21
POT
R2
R1
WE
S5 (S25)
S4 (S24)
HZ
Motor types
for standard limit switch board
only
12-25kN
Alternative limit switch board
only 2,2-5kN
Two-wire connection
(current loop)
4...20 mA
24 V DC
Four-wire connection
4...20 mA
24 V DC and AC
Four-wire connection
2...10 V
24 V DC and AC
Option PA / NA:
Example with synchronous motor
Limit switch board with integrated
motor control
Circuit board BLDC
24V DC only with
input board
only for 100-240V~
input board
Wire connections of the
different valve types
Straight through
valve
3-way valve
with mixing plug
3-way valve
with diverting plug
closed
open
A - AB open
B - AB open
AB - B open
AB - A open
BLDC-Motor
ARI-PREMIO 2,2-25kN 100-240V / 24VAC/DC
Synchronous motor
RI32
Attention!
Do not connect terminal 2 and terminal 3.
By a potential shift the position indicator
RI32 could be destroyed.
HZ Heating resistor
DE Torque switch
WE (S3) Travel switch for limiting the travel distance in retracting direction
RI21 Electronic position indicator
ES11 Electronic position controller
RI32 Electronic position indicator
NA Low-voltage connection board, zero potential
PA Standard-voltage connection board, zero potential
POT Potentiometer
WE Travel switch, zero potential

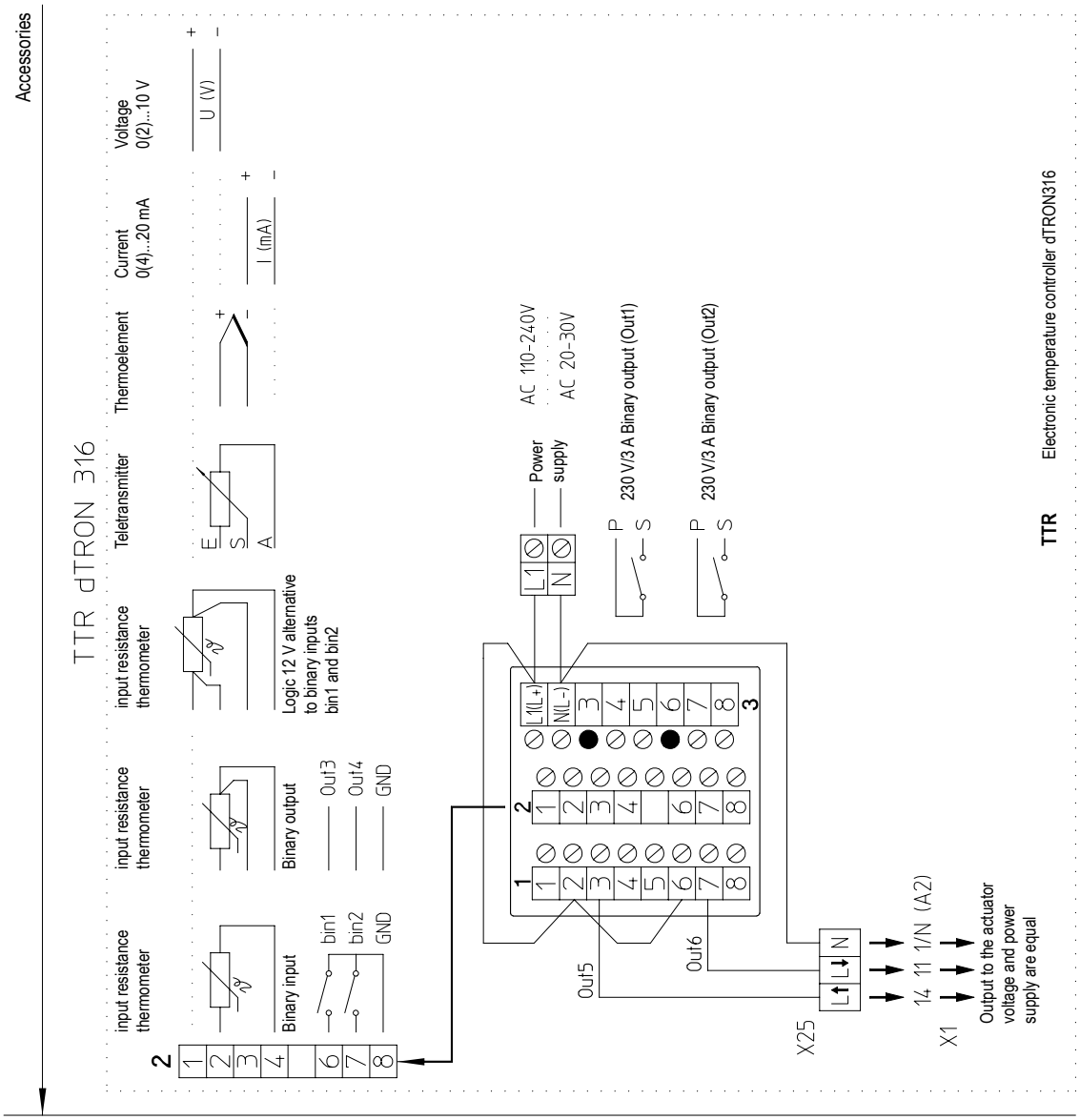
Accessories
TTR dTRON 316
input resistance thermometer
input resistance thermometer
input resistance thermometer
Teletransmitter
Thermoelement
Current 0(4)...20 mA
Voltage 0(2)...10 V
Binary input
Binary output
Logic 12 V alternative to binary inputs bin1 and bin2
bin1
bin2
GND
Out3
Out4
GND
Out5
Out6
Power supply
AC 110-240V
AC 20-30V
230 V/3 A Binary output (Out1)
230 V/3 A Binary output (Out2)
X25
X1
14 11 1/N (A2)
Output to the actuator voltage and power supply are equal
TTR
Electronic temperature controller dTRON316

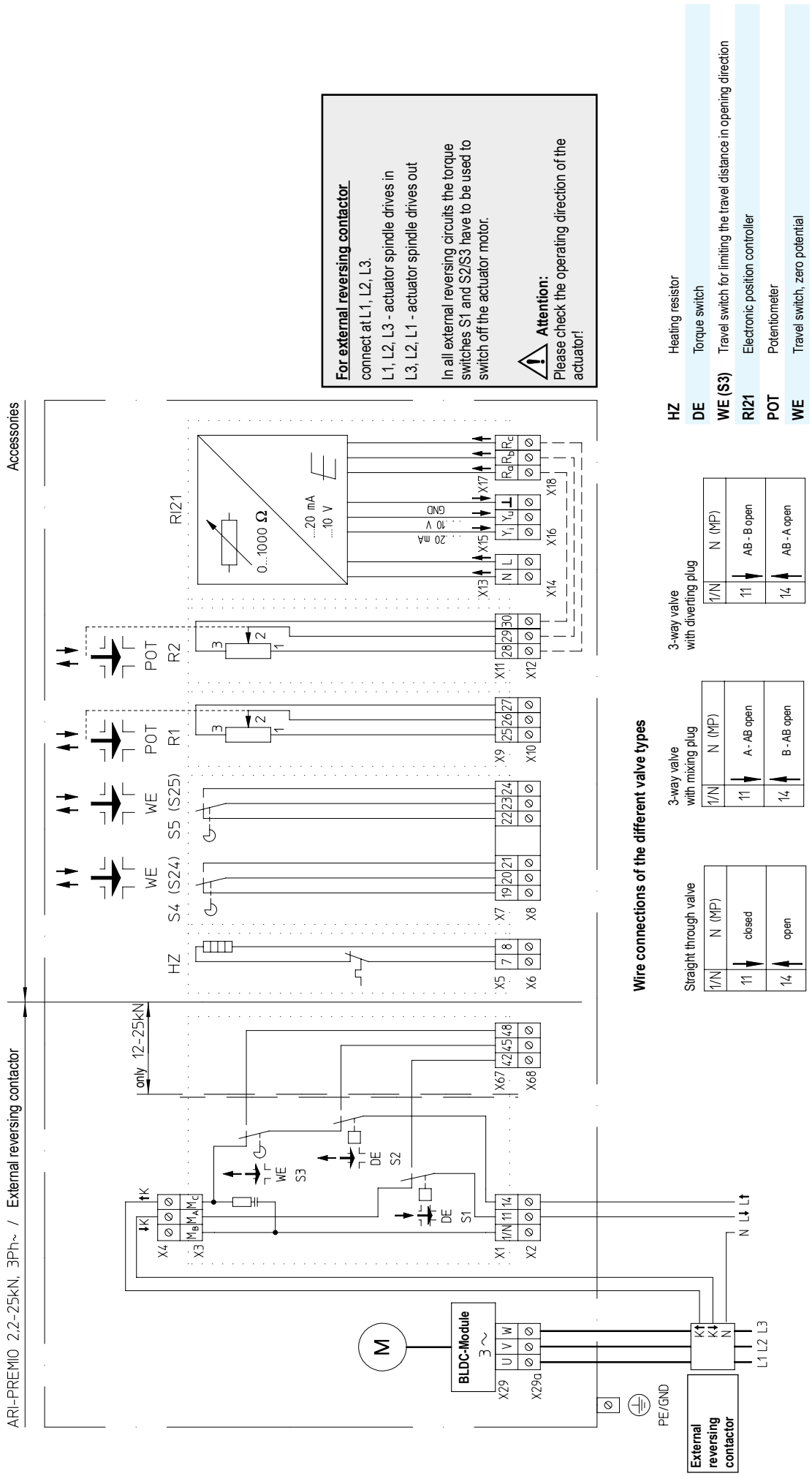
For external reversing contactor
connect at L1, L2, L3.
L1, L2, L3 - actuator spindle drives in
L3, L2, L1 - actuator spindle drives out
In all external reversing circuits the torque switches S1 and S2/S3 have to be used to switch off the actuator motor.
Attention:
Please check the operating direction of the actuator!
HZ Heating resistor
DE Torque switch
WE (S3) Travel switch for limiting the travel distance in opening direction
RI21 Electronic position controller
POT Potentiometer
WE Travel switch, zero potential
Wire connections of the different valve types
Straight through valve
3-way valve with mixing plug
3-way valve with diverting plug
1/N N (MP)
11 closed
14 open
11 A - AB open
14 B - AB open
11 AB - B open
14 AB - A open
Accessories
ARI-PREMIO 2,2-25kN, 3Ph~ / External reversing contactor
HZ
S4 (S24) WE
S5 (S25) WE
R1 POT
R2 POT
RI21
0...1000 Ω
...20 mA
...10 V
GND
only 12-25kN
S1 DE
S2 DE
S3 WE
BLDC-Module
3 ~
U V W
PE/GND
External reversing contactor
L1 L2 L3
N L1 L2

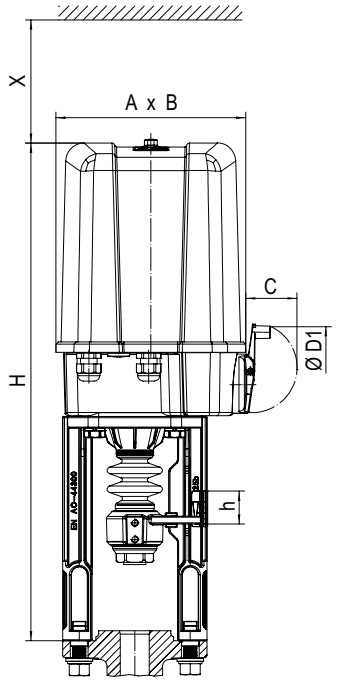

2,2 - 5 kN
Nominal travel max. 30 mm

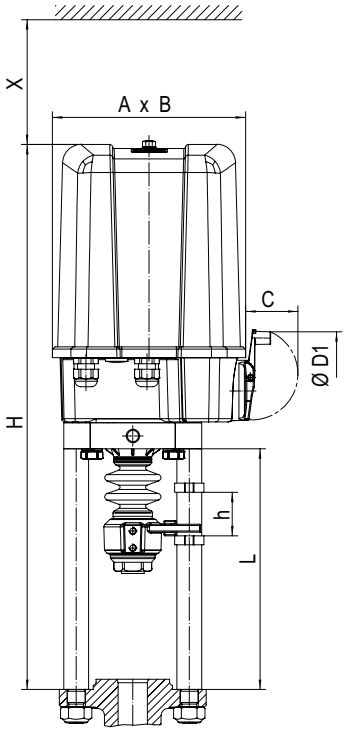

2,2 - 5 kN
Nominal travel > 30 mm - 50 mm

		2,2 - 5 kN	
A	(mm)	171	
B	(mm)	156	
C	(mm)	50	
Ø D1	(mm)	90	
X	(mm)	150	
H	(mm)	448	482
h (Nominal travel)	(mm)	max. 30	max. 50
L (Column)	(mm)	for x=83 199 for x=98 213	

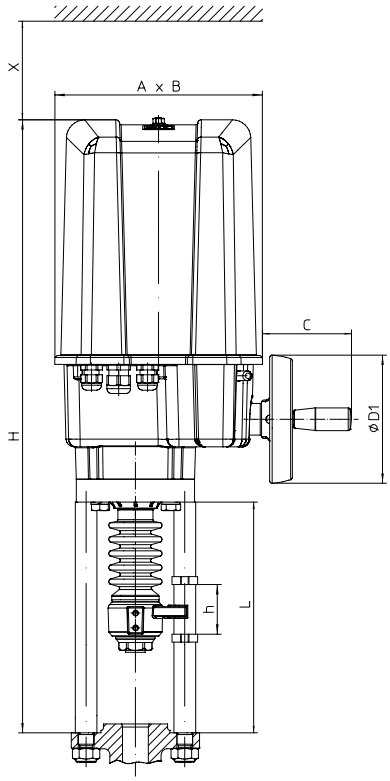

12 - 25 kN
Nominal travel max. 80 mm

		12 - 25 kN		
A	(mm)	210		
B	(mm)	184		
C	(mm)	90		
Ø D1	(mm)	130		
X	(mm)	200		
H	(mm)	622	637	652
h (Nominal travel)	(mm)	max. 50	max. 65	max. 80
L (Column)	(mm)	234	249	for x=83 249 for x=98 264

ARI-Armaturen Albert Richter GmbH & Co. KG, D-33750 Schloß Holte-Stukenbrock,
Tel. +49 (0)5207 / 994-0, Telefax +49 (0)5207 / 994-158 or 159 Internet: https://www.ari-armaturen.com E-mail: info.vertrieb@ari-armaturen.com